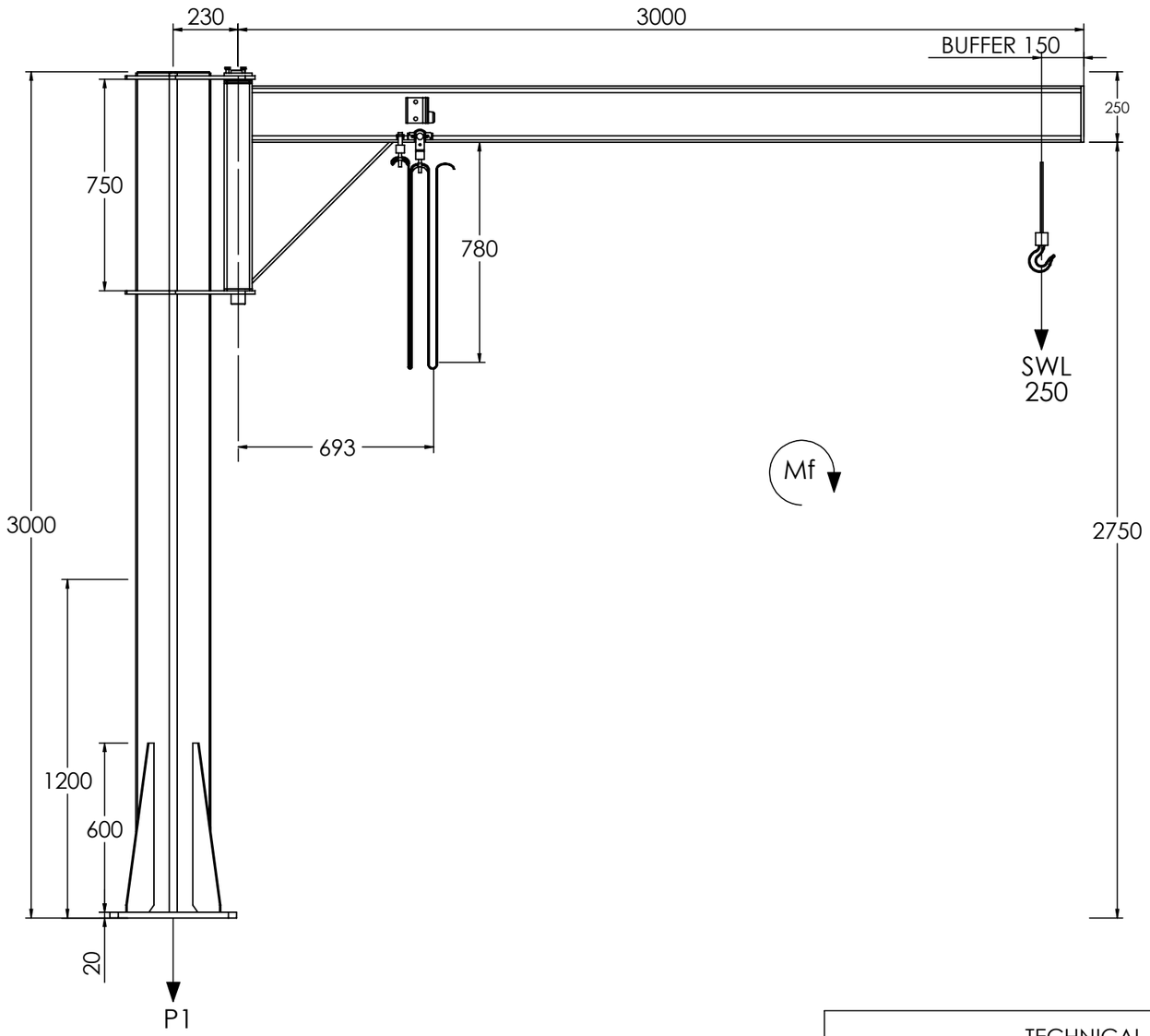

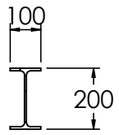

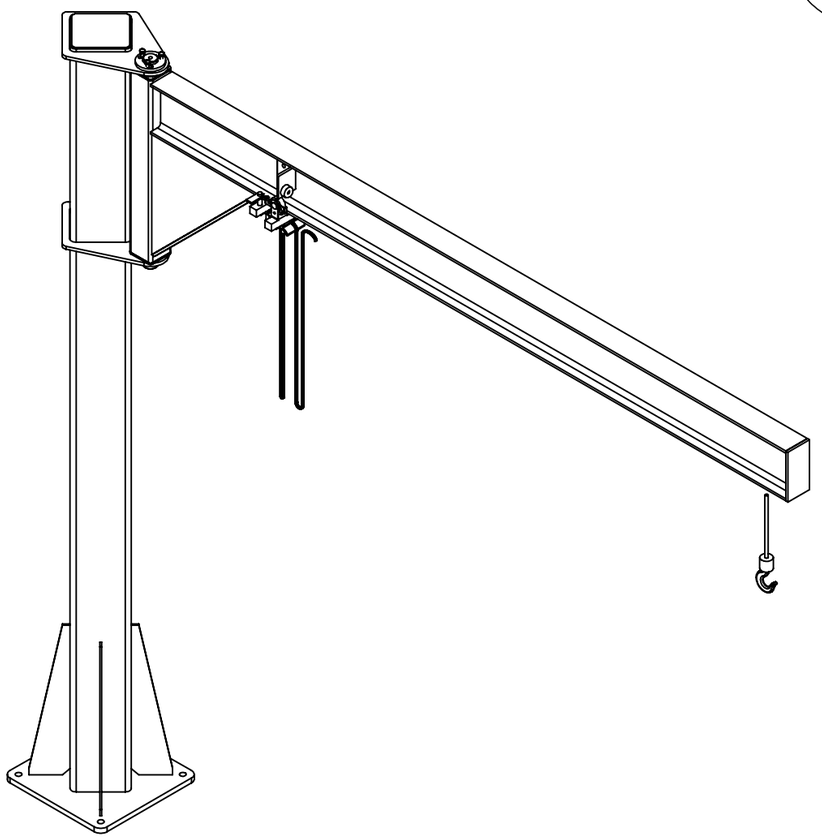

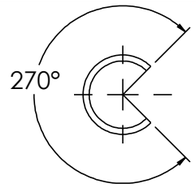

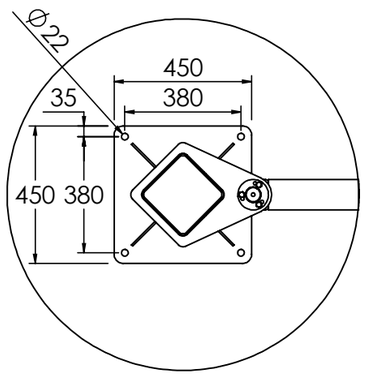

TECHNICAL DATA	
SAFE WORKING LOAD (SWL):	250 kg
HEIGHT:	3000 mm
RADIUS:	3000 mm
PIVOT OPERATION:	Manual Push/Pull
TRAVEL OPERATION:	Manual Push/Pull
ARM WEIGHT:	93.3 kg
HOIST WEIGHT*:	50 kg
MAX ALLOWABLE HOISTING SPEED:	8 m/min
COLUMN WEIGHT:	161.5 kg
DOWNWARD FORCE (P1)**:	6.1 kN
OVERTURNING FORCE (Mf):	12 kNm
MATERIAL:	Steel
FINISH:	Powder Coated RAL 1021

DESIGN SPECIFICATION	
DESIGN STANDARDS:	BS 7333 (1990) Class A3 / BS EN 16851 (2017)
ALLOWABLE DEFLECTION:	(Height + Radius) / 250 = 24mm

NIKO HELM HELLAS

ΑΝΟΧΕΣ - TOLERANCES ΕΚΤΟΣ ΑΝ ΟΡΙΖΕΤΑΙ ΔΙΑΦΟΡΕΤΙΚΑ UNLESS OTERWISE SPECIFIED ISO 2768mk	ΚΛΙΜΑΚΑ SCALE NTS	METRIC	HELM HELLAS S.A. MANUFACTURERS OF SLIDING DOORS FITTINGS AND CONVEYOR SYSTEMS 82ª Km. ATHENS - KORINTHOS 20100,KORINTH P.O. BOX 209 GREECE www.niko.eu.com	
ΥΛΙΚΟ - MATERIAL -		ΟΝΟΜΑ NAME	ΗΜΕΡ. DATE	ΠΕΡΙΓΡΑΦΗ - DESCRIPTION
	ΣΧΕΔΙΑΣΗ DESIGN	A.PY	11.04.25	BE 7898
ΕΠΕΞΕΡΓΑΣΙΑ - TREATMENT -	ΕΛΕΓΧΟΣ CHECK	P.PSIL	11.04.25	
	ΕΓΚΡΙΣΗ APPROVAL	P.PSIL	11.04.25	
ΤΕΛΙΚΗ ΕΠΕΞΕΡΓΑΣΙΑ - FINISH -	ΑΝΑΘΕΩΡ. REV -	ΜΕΓΕΘΟΣ SIZE A3	ΣΕΛΙΔΑ SHEET 1/1	ΚΩΔΙΚΟΣ - PART NUMBER 1.200.U753.K30.0250

** HOIST WEIGHT INCLUDED IN DOWNWARD FORCE CALCULATION.
* HOIST WEIGHT BASED ON SELECTED HOIST MODEL, IF SELECTED. IF NOT, WEIGHT ASSUMED TO BE 50KG.